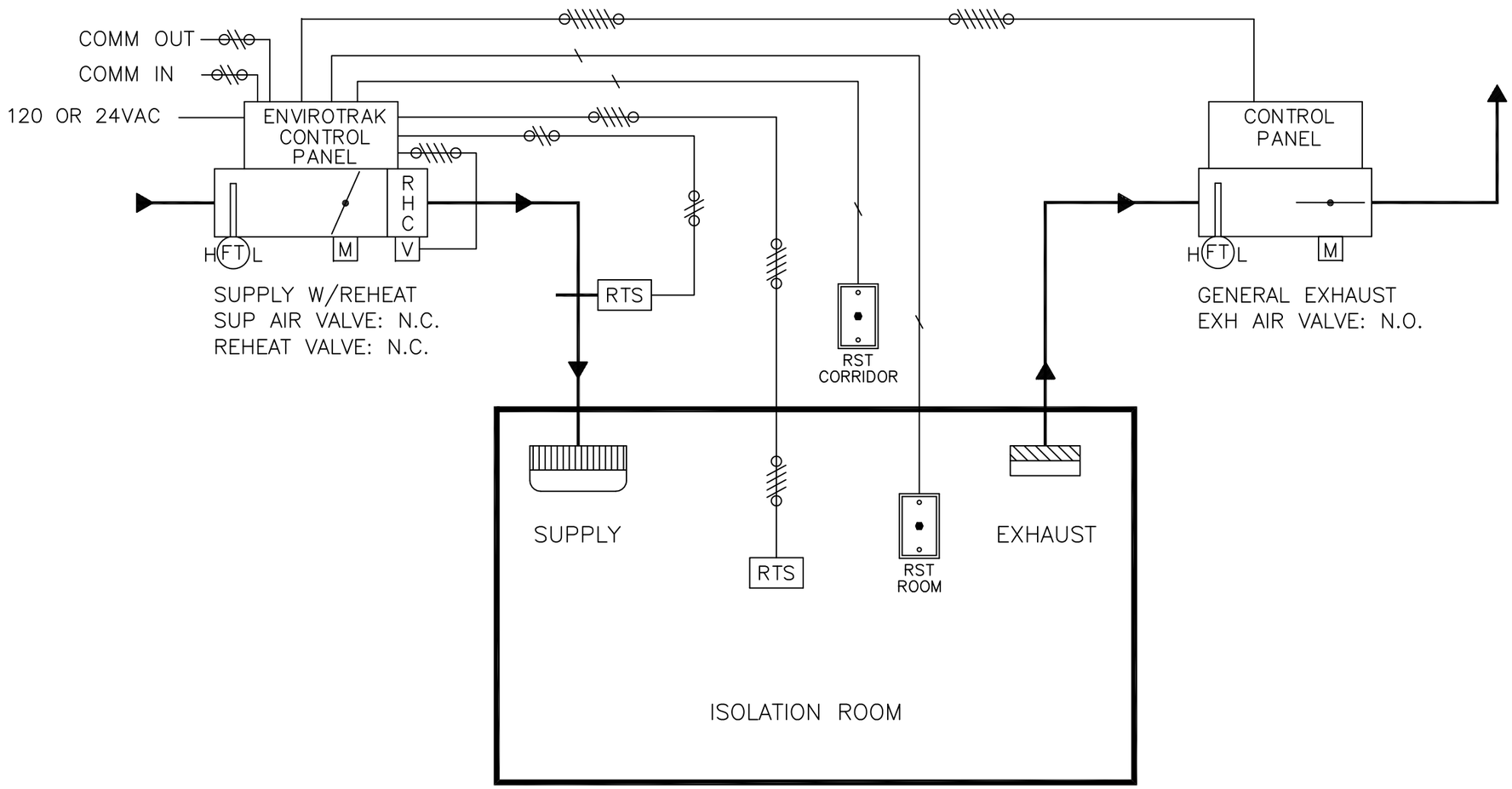

1/4" PNEUMATIC TUBING FURNISHED, INSTALLED AND TERMINATED BY ATC

2 CONDUCTOR CABLE FURNISHED, INSTALLED AND TERMINATED BY ATC

TWISTED SHIELDED PAIR FURNISHED, INSTALLED, AND TERMINATED BY ATC

3 CONDUCTOR SHIELDED CABLE FURNISHED, INSTALLED, AND TERMINATED BY ATC

4 CONDUCTOR SHIELDED CABLE FURNISHED, INSTALLED AND TERMINATED BY ATC

6 CONDUCTOR SHIELDED CABLE FURNISHED, INSTALLED, AND TERMINATED BY ATC

10 CONDUCTOR SHIELDED CABLE FURNISHED, INSTALLED AND TERMINATED BY ATC

ENVIROTRAK CONTROL PANELS REQUIRE 120 OR 24 VAC BY OTHERS.

AIRFLOW AND FIELD WIRING DIAGRAM

ISOLATION ROOM – DIFFERENTIAL PRESSURE CONTROL

SUBMITTAL COPY

LABORATORY CONTROL SYSTEMS INC
91 Quinton Road
Scott Township, PA 18447
(570) 487-2490

No.	Revision	Date

Architect:
Engineer:
Contractor:
Drawn by: LCS
Chk by:
CAD file: WebHosp02 Date: 01/15/20

ISOLATION ROOM
DIFFERENTIAL PRESSURE CONTROL

JOB NUMBER

SHEET NO.
OF