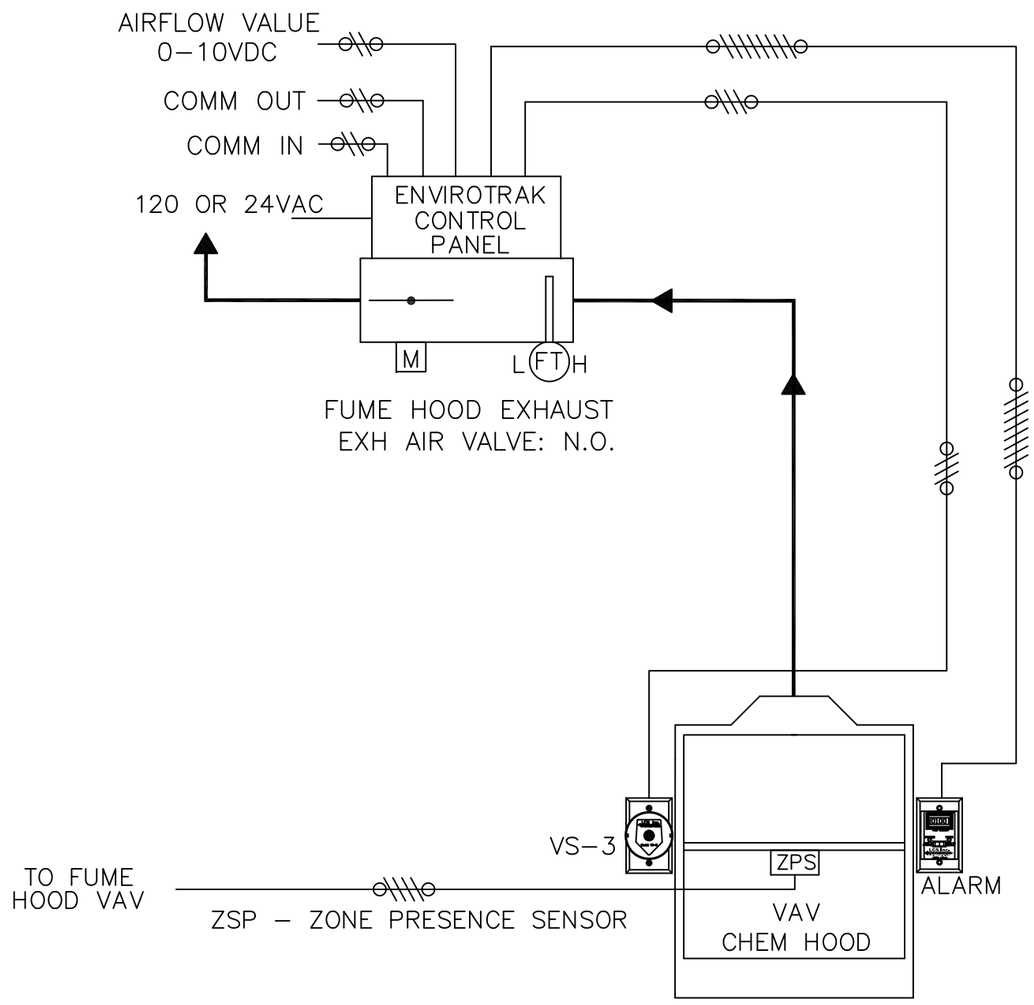

AIRFLOW AND FIELD WIRING DIAGRAM

STAND–ALONE FUME HOOD FACE VELOCITY CONTROL WITH ZONE PRESENCE SENSOR

1/4" PNEUMATIC TUBING FURNISHED, INSTALLED AND TERMINATED BY ATC

2 CONDUCTOR CABLE FURNISHED, INSTALLED AND TERMINATED BY ATC

TWISTED SHIELDED PAIR FURNISHED, INSTALLED, AND TERMINATED BY ATC

3 CONDUCTOR SHIELDED CABLE FURNISHED, INSTALLED, AND TERMINATED BY ATC

4 CONDUCTOR SHIELDED CABLE FURNISHED, INSTALLED AND TERMINATED BY ATC

6 CONDUCTOR SHIELDED CABLE FURNISHED, INSTALLED, AND TERMINATED BY ATC

10 CONDUCTOR SHIELDED CABLE FURNISHED, INSTALLED AND TERMINATED BY ATC

ENVIROTRAK CONTROL PANELS REQUIRE 120OR 24 VAC BY OTHERS.

SUBMITTAL COPY

LABORATORY CONTROL SYSTEMS INC
91 Quinton Road
Scott Township, PA 18447
(570) 487-2490

No.	Revision	Date

Architect:
Engineer:
Contractor:
Drawn by: LCS
Chk by:
CAD file: WebLab10 Date: 01/20/20

LABORATORY
STAND–ALONE FUME HOOD FACE VELOCITY CONTROL
WITH ZONE PRESENCE SENSOR

JOB NUMBER

SHEET NO.
OF