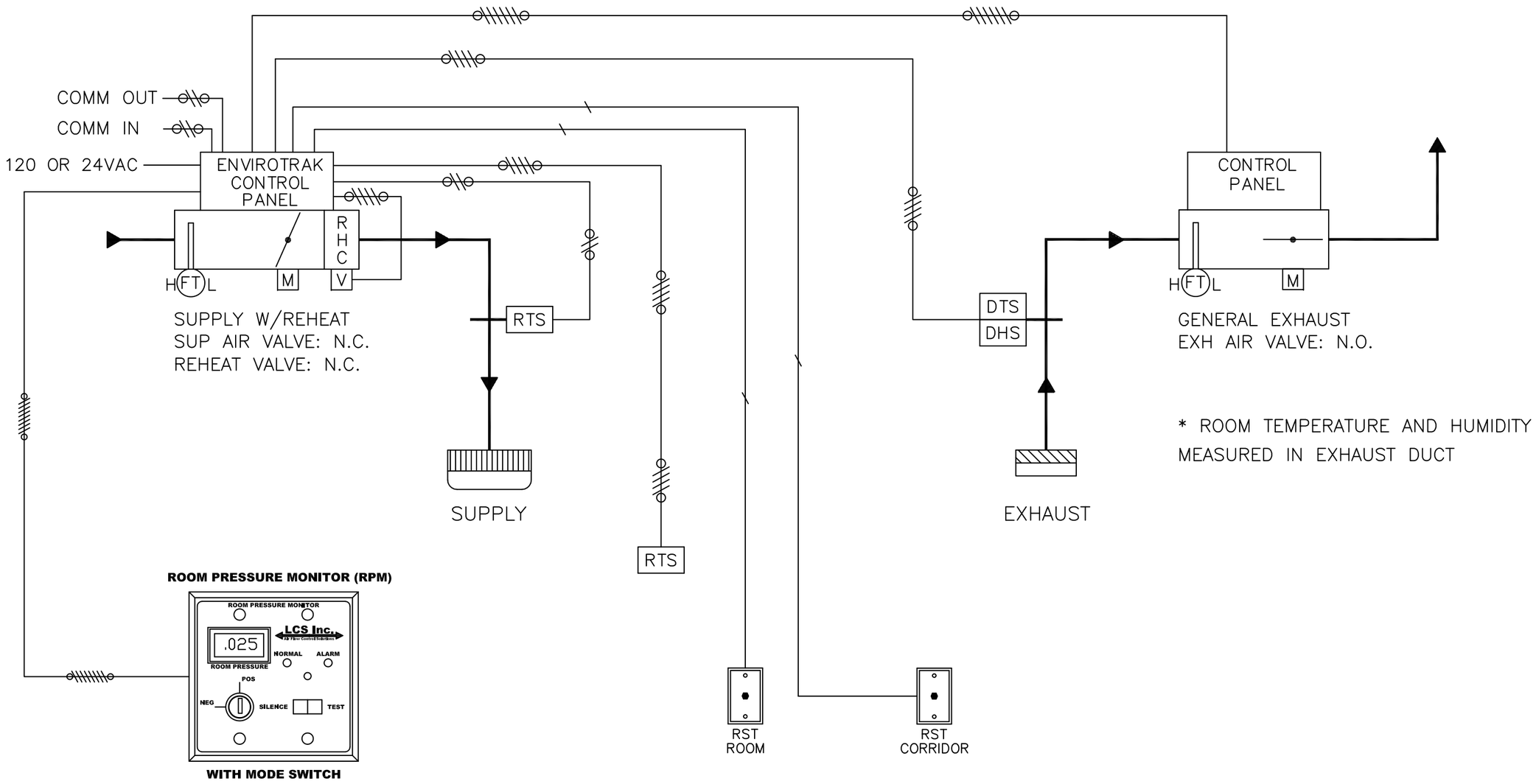


1/4" PNEUMATIC TUBING FURNISHED, INSTALLED AND TERMINATED BY ATC

2 CONDUCTOR CABLE FURNISHED, INSTALLED AND TERMINATED BY ATC

TWISTED SHIELDED PAIR FURNISHED, INSTALLED, AND TERMINATED BY ATC

3 CONDUCTOR SHIELDED CABLE FURNISHED, INSTALLED, AND TERMINATED BY ATC

4 CONDUCTOR SHIELDED CABLE FURNISHED, INSTALLED AND TERMINATED BY ATC

6 CONDUCTOR SHIELDED CABLE FURNISHED, INSTALLED, AND TERMINATED BY ATC

10 CONDUCTOR SHIELDED CABLE FURNISHED, INSTALLED AND TERMINATED BY ATC

ENVIROTRAK CONTROL PANELS REQUIRE 120OR 24 VAC BY OTHERS.

# AIRFLOW AND FIELD WIRING DIAGRAM

## VIVARIUM – DIFFERENTIAL PRESSURE CONTROL AND MONITOR WITH TEMPERATURE AND HUMIDITY

SUBMITTAL COPY

LABORATORY CONTROL SYSTEMS INC
91 Quinton Road
Scott Township, PA 18447
(570) 487-2490

| No. | Revision | Date |
|---|---|---|

Architect:
Engineer:
Contractor:
Drawn by: LCS
Chk by:
CAD file: WebViv02
Date: 01/20/20

VIVARIUM
DIFFERENTIAL PRESSURE CONTROL AND MONITOR WITH TEMPERATURE AND HUMIDITY

JOB NUMBER

SHEET NO.
OF